RELEASED			
REV	DATE	REVISION	DWN
A	5/14/10	RELEASED	ES
-	-	- -	
-	-	- -	

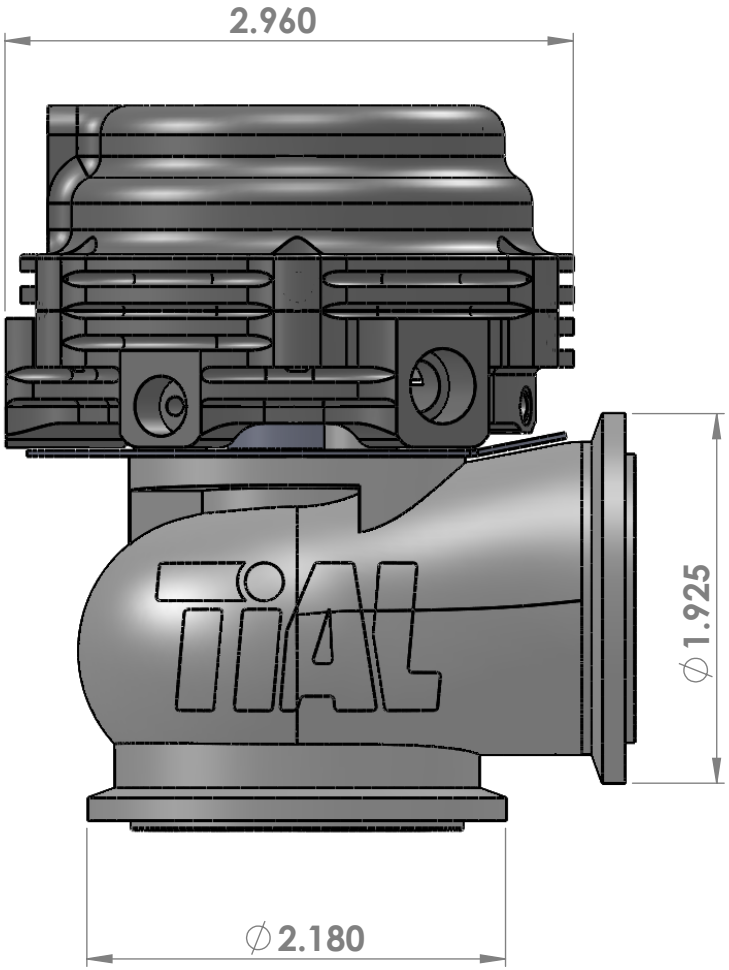

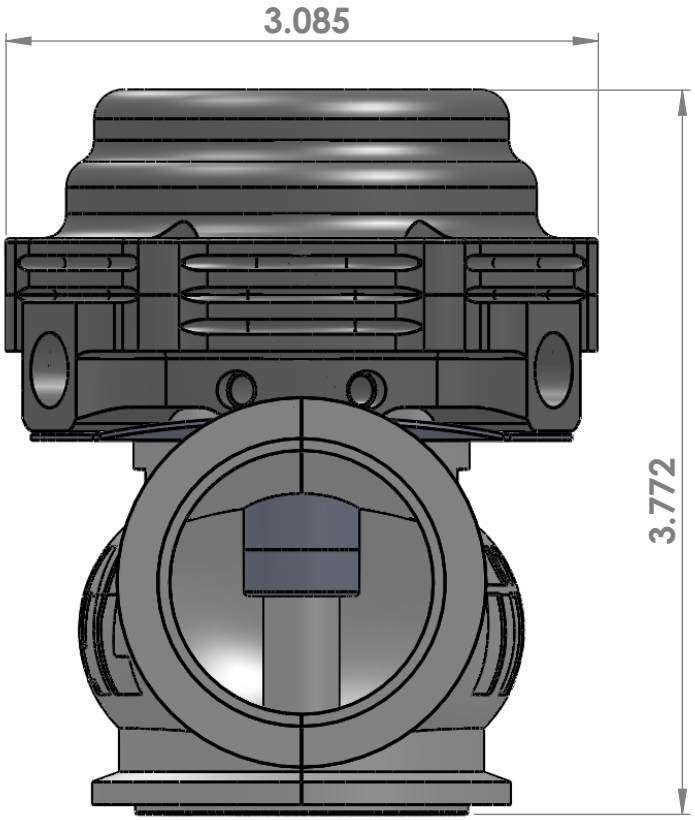

Performance by GIK turbo®

TiAL SPORT

TiAL PRODUCTS, 450 S. SHIAWASSEE, OWOSSO, MI 48867

TITLE

MV-S

SIZE	PART NO.	REV
A		A

DRAWN:	DATE:	CHECKED:	SHEET: 1 OF 1
ES	5/14/10	ES	

PROPRIETARY AND CONFIDENTIAL
THE INFORMATION CONTAINED IN THIS DRAWING IS THE SOLE PROPERTY OF TiAL PRODUCTS.
ANY REPRODUCTION IN PART OR AS A WHOLE WITHOUT THE WRITTEN PERMISSION OF TiAL PRODUCTS IS STRICTLY PROHIBITED.

5 4 3 2 1